KENTUCKY GEOLOGICAL SURVEY
James C. Cobb, State Geologist and Director
University of Kentucky, Lexington

DRAFT GEOLOGIC QUADRANGLE
GROVE CENTER QUADRANGLE, KY.
Series XII, 2009
GQ-1314
Version 1.0
Contract Report 36

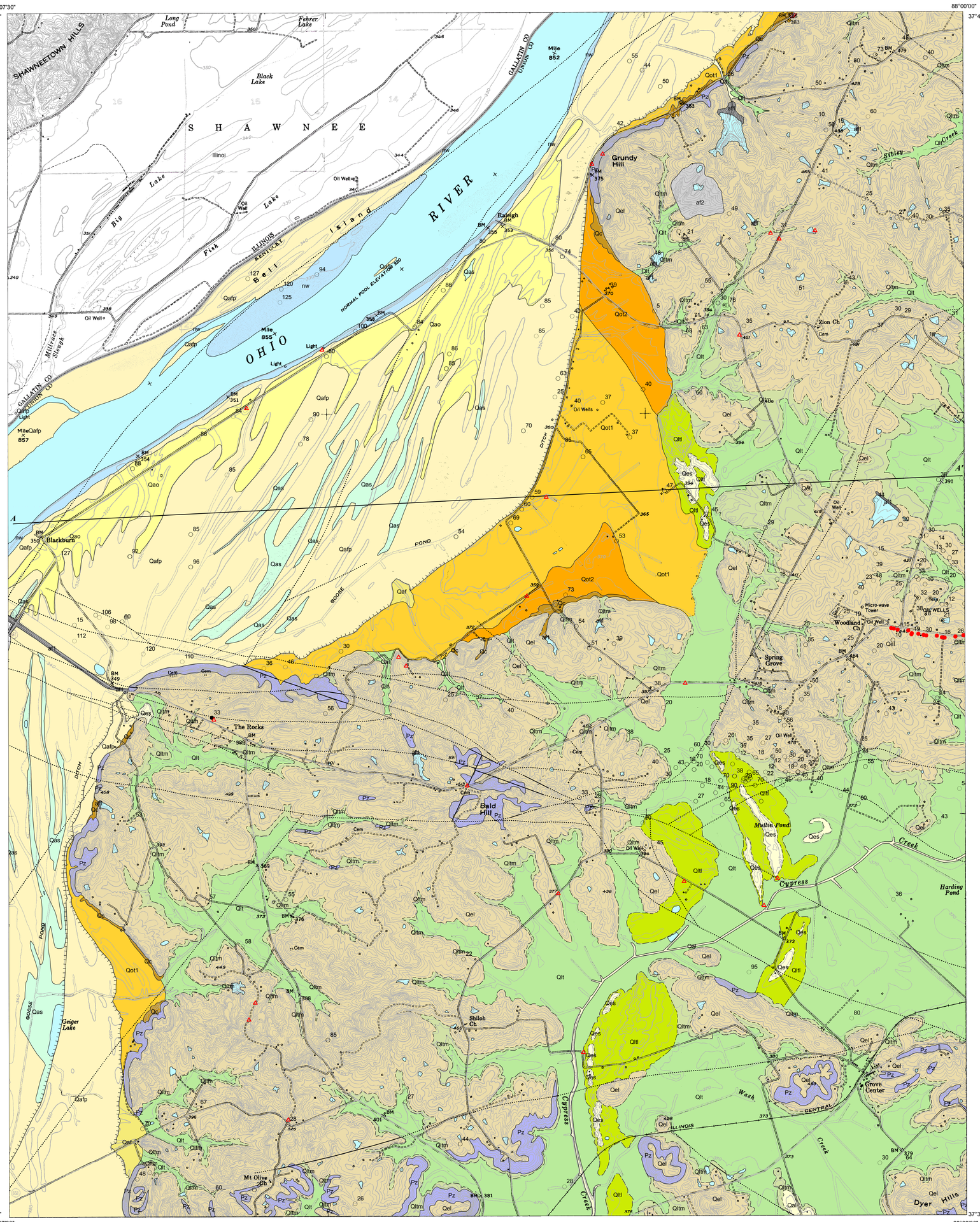

SCALE 1:24000

Universal Transverse Mercator projection, zone 16, North American Datum of 1927

Topographic base and cultural features are Kentucky Raster Graphics (KRG) from Kymartian.ky.gov/krgmaps/KRG of Grove Center

Declination
2° 14' W

1 0.5 0 1 Miles

1,000 500 0 1,000 2,000 3,000 4,000 5,000 6,000 7,000 Feet

1 0.5 0 1 Kilometers

CONTOUR INTERVAL 10 FEET

QUADRANGLE LOCATION

7.5-MIN QUADRANGLE INDEX

CORRELATION OF MAP UNITS

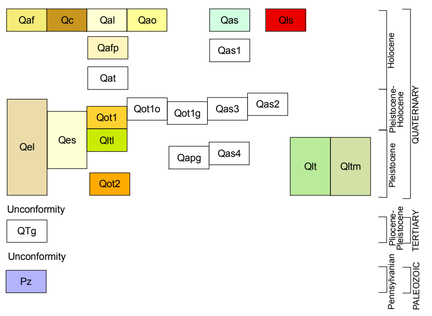

CORRELATION OF MAP UNITS chart and DESCRIPTION OF MAP UNITS
Includes map units from adjacent quadrangles. Only map units within this quadrangle are shown with color fill.

DESCRIPTION OF MAP UNITS

Qal — **Alluvium, modern (Holocene)**
Silty clay and sandy silt with minor sand and sparse gravel; thickness 10 to 30 feet (3 to 10 m); found along river banks and in floodplains of smaller streams; deposited by modern/historic stream processes; deposit is inset into adjacent map units; contact with adjacent units varies from sharp to poorly defined; locally inferred on the basis of topographic expression. Some streams in the mapped area have been rerouted for land-use purposes; locally, some Qal dredged from these streams has been extensively redistributed across adjacent fields and is unmappable.

Qao — **Alluvium, natural levee deposits (Holocene)**
Sand and silty sand; deposited in levee ridges or overwash deposits on floodplains of major rivers (Qafp) and on the Ohio River low outwash terraces (Qot1); grades into adjacent floodplain deposits; typically sandier than adjacent floodplain deposits.

Qas — **Alluvium, active modern floodplain sloughs (Holocene)**
Organic-rich, black and gray clayey silt, silty clay, and clay; found within low lying areas on floodplain (Qafp) and low outwash terrace (Qot1); serve as poorly drained pathways which channel water from the floodplain; areas that retain water year-round form bogs and cypress swamps.

Qaf — **Alluvium, alluvial fans (Holocene)**
Silt, sand, and gravel; thickness uncertain; forms fan-shaped alluvial-colluvial aprons at mouths of small valleys; deposited by floods and debris flows from small tributary valleys developed in loess-mantled uplands; extent of unit mapped by topographic expression.

Qc — **Colluvium (Holocene)**
Silt, sand, clay, and rock fragments; unsorted; which has been transported downslope under the influence of gravity; primarily mantles steep slopes.

Qafp — **Alluvium, river floodplains (Holocene)**
Sand, silt, fine gravel, and clay; surface mantled by silty clay and sandy silt; surface forms the lowest well-developed terrace along major rivers; 30 to 45 feet (10 to 15 m) thick; overlies older unconsolidated deposits or bedrock; contact is sharp, drawn at scamp of next higher terrace; estimated to range in age up to 6,500 years.

Qas1 — **Alluvium, abandoned Green River meander (Holocene)**
Organic-rich, black and gray clayey silt, silty clay, and clay; deposited within recently abandoned meander of Green River; can retain standing water for months; areas that retain water year-round form bogs and cypress swamps.

Qat — **Alluvium, low terrace (Holocene)**
Silt, sand, and clay deposited by rivers; forms terrace above adjacent floodplain (Qafp); contact with adjacent units varies from sharp to poorly defined; locally inferred on the basis of topographic expression; distinguished by topographic expression from lower floodplain (Qafp), but found below Ohio River low outwash terrace (Qot1) and lacustrine terrace (Qlt).

Qas2 — **Alluvium, abandoned Green River channel (Pleistocene - Holocene)**
Clayey silt, silty sand, and silty clay; 30 to 45 feet (10 to 15 m) thick; forms arcuate, low-lying trough; represents an abandoned channel of Green River as it migrated across the low terrace (Qot1g); overlies older outwash deposits (Qot2); contact sharp, identified by surface topography; floods frequently.

Qoto1o — **Alluvium, reworked outwash, Ohio River scrollwork terrace (Pleistocene – Holocene)**
Fine to coarse sand and gravel, with local lenses of silt and clay; gravel includes chert, quartzite, sandstone, siltstone, igneous and metamorphic rocks, limestone, and coal; lithologically similar to adjacent outwash terraces; surface mantled with alluvial silty sand and sandy silt; 30 to 45 feet (10 to 15 m) thick; surface forms well-developed, swell-and-swale topography on Ohio River low terrace; reworked during postglacial adjustment of the Ohio River; overlies older outwash deposits (Qot2); contact is approximate, inferred from surface topography.

Qas3 — **Alluvium, abandoned Green River channel (Pleistocene - Holocene)**
Silty sand, clayey silt, and silty clay; 30 to 45 feet (10 to 15 m) thick; forms sinuous, low-lying trough (Katie Meadow Slough); represents an abandoned channel of Green River as it migrated across the low terrace (Qot1g); overlies older outwash deposits (Qot2); contact sharp, identified by surface topography; floods frequently.

Qot1g — **Alluvium, reworked outwash, Green River scrollwork terrace (Pleistocene – Holocene)**
Fine to coarse sand and gravel, with local lenses of silt and clay; gravel includes chert, quartzite, sandstone, siltstone, limestone, and coal; lithologically similar to adjacent outwash terraces; surface mantled with alluvial silty sand and sandy silt; 30 to 45 feet (10 to 15 m) thick; surface forms well-developed, swell-and-swale topography on Ohio River low terrace; deposited as point bar deposits by meandering postglacial Green River; overlies older outwash deposits (Qot2); contact is approximate, inferred from surface topography.

Qot1 — **Alluvium, outwash, low terrace (Pleistocene - Holocene)**
Fine to coarse sand and gravel, with local lenses of silt and clay; gravel includes chert, quartzite, sandstone, siltstone, igneous and metamorphic rocks, limestone, and coal; lithologically similar to high outwash terrace (Qot2); surface mantled with alluvial silty sand and sandy silt; 30 to 45 feet (10 to 15 m) thick; surface forms well-developed, low-relief terrace along Ohio River valley; deposited as glacial outwash reworked by late glacial or post-glacial Ohio River; overlies older outwash deposits (Qot2); contact is sharp, drawn at scamp of next higher terrace or upland; floods occasionally.

Qot2 — **Alluvium, outwash, high terrace (Pleistocene)**
Fine to coarse sand and gravel, with local lenses of silt and clay; gravel includes chert, quartzite, sandstone, siltstone, igneous and metamorphic rocks, limestone, and coal; lithologically similar to adjacent outwash terraces; surface mantled with eolian and alluvial silty sand and sandy silt; up to 170 feet (52 m) thick; surface forms well-developed, dissected terrace along Ohio River valley; deposited as glacial outwash; represents maximum valley filling by glacial outwash valley train deposits; overlies bedrock (Pz) or older alluvial deposits (not differentiated); contact is sharp, drawn at scamp of adjacent terrace or upland; age estimated to be 120,000 to 22,000 years old; most of terrace surface is above historic flood zone.

Qel — **Loess (Pleistocene-Holocene)**
Silt, clayey silt, and fine sand deposited by wind; typically massive; unit thickest (up to 60 feet) near Ohio River valley and thins gradually to the south; mantles bedrock upland; mapped as bedrock where less than 3 to 5 ft (1 to 1.6 m) thick in uplands; not mapped where locally found on lacustrine terrace (Qlt) and high outwash terraces (Qot2); estimated to range in age from 22,500 to 10,000 years old; locally includes thin layers of loess inferred to be older than 30,000 years.

Qes — **Sand dunes (Pleistocene – Holocene)**
Very fine to fine sand; locally contains lenses of clayey silt; thickness uncertain, base not observed; deposited by wind in long, linear ridges; mantled by loess up to 15 ft (5 m) thick.

Qltl — **Lake levee (Pleistocene)**
Silt, clayey silt, and fine sand deposited by water and wind. Formed where moving water entered quieter conditions and deposited layered mixed sediments across the mouth of tributaries forming low ridges. Sand dunes (Qes) occur on many while loess (Qel) generally blankets these ridges indicating that formation is contemporaneous with lacustrine deposition and terminated prior to final loess deposition

Qas4 — **Alluvium, abandoned Green River channel (Pleistocene)**
Clayey silt, silty clay, and silty sand; 30 to 45 feet (10 to 15 m) thick; forms sinuous, low-lying trough inset into Green River paleovalley (Qapg); represents an abandoned channel of Green River as it migrated across the high terrace (Qot2); overlies older outwash (Qot2); contact sharp, identified by surface topography; floods occasionally.

Qapg — **Alluvium, Green River paleovalley (Pleistocene)**
Silty sand, clayey silt and silty clay with minor chert gravel; 30 to 45 feet (10 to 15 m) thick; includes Beds at Hubert Court of Ray (1965); forms broad, linear trough inset into and overlying deposits of adjacent high outwash terrace (Qot2) and lacustrine terrace (Qlt); represents abandoned Pleistocene paleovalley of the Green River; contact is sharp, drawn at scarp of adjacent high outwash or lacustrine terrace; wood from about 40 feet deep has been radiocarbon dated to 23,150 ± 500 ypb (Ray, 1965).

Qltm — **Upland marginal lacustrine deposits (Pleistocene)**
Clayey silt, silt, and fine sand; thickness uncertain; surface forms moderate slope and benched upland areas bordering lacustrine deposits (Qlt); represents complex transition between lacustrine deposits and loess mantling upland; deposits include loess, loess-derived slopewash, colluvium, lacustrine silt and clay, and lacustrine shoreline deposits; contacts gradational and approximate, mapped on the basis of topographic expression.

Qlt — **Slackwater deposits, lacustrine terrace (Pleistocene)**
Clayey silt and silty clay; 30 to 45 feet (10 to 15 m) thick, thicker in tributary valleys; overlying complex deposits of sand, silt, clay and minor gravel; locally mantled by loess (similar to Qel, not mapped); forms prominent low-relief terrace in tributary valleys and sheltered portions of Ohio River valley; unit deposited in lacustrine and slackwater environments associated with alluviation of the Ohio River valley by glacial outwash and resulting impoundment of tributary valleys; underlying material is of apparent mixed fluvial and fluvio-lacustrine origin; contact with fluvial units is sharp, and drawn on scarps separating adjacent terraces; contact with eolian and upland units (Qel, Qes, Qltm) is gradational and approximate, inferred by surface topography; estimated to range in age from 23,000 to 18,000 years old.

QTg — **Upland gravel (Pliocene-Pleistocene)**
Gravel and medium to coarse sand; pebbles include brown, patina chert, quartz, and silicified fossils; locally cemented by iron oxide; thickness uncertain; unit found on uplands, covered by loess and poorly exposed; comparable to the Luce Gravel of Ray (1965).

Pz — **Bedrock and residuum (Paleozoic)**
Consolidated shale, sandstone, limestone, coal, and overlying poorly sorted regolith, comprising the core of the uplands in the study area; includes areas of loess thinner than 3 to 5 ft (1 to 1.6 m).

Qls — **Landslide (Modern)**
Landslides visible due to over-steepened slopes on hillsides and road-cuts and where man-made lakes have raised the water table.

af1 — **Artificial fill, engineered fill (Modern)**
Compacted material used as fill for the construction of roads, railroads, buildings, floodwalls, and other engineered structures. Present in all areas of development: mapped only where fill significantly changes the elevation.

af2 — **Artificial fill, mine spoil (Modern)**
Disturbed bedrock and regolith produced from mining operations.

af3 — **Artificial fill, other (Modern)**
Chaotic, unconsolidated fill material; includes material dredged from creeks to form artificial levees. Mapped only where fill is distinct.

nw — **New water (Modern)**
Areas of former land which have been removed by active erosion or dredging since the completion of original topographic mapping.

EXPLANATION

- Contact
- Inferred Contact
- Inferred Questionable
- Approximate Contact
- Fault
- Concealed fault
- Terrace scarp
- State Line
- KGS database, number indicate depth to bedrock in feet
- KGS drilling, number indicate depth to bedrock in feet
- KYTC Data, number indicate depth to bedrock in feet
- Landform observation and soil probe
- Landform observation

GEOLOGIC SUMMARY

GEOLOGIC SETTING

The regional project area is located in the lower Ohio River Valley, downstream of the confluence of the Wabash River and Ohio River. The landscape of the map area is characterized by very low to high-relief bedrock uplands separated by broad valleys. Although the area is just south of the Pleistocene (Illinoian) glacial limit, both the Ohio and Wabash Rivers served as major outlets for glacial meltwater and entrained sediment during glacial stages. Rapid accumulation of glacial outwash in the valleys and along the mouths of tributaries led to impoundment and extensive deposition of slackwater and lacustrine sediment in the tributary valleys. This lacustrine deposit has a complex and gradational transition with loess mantling adjacent uplands. The loess was primarily derived from the valley-bottom outwash. The uplands are underlain by faulted Upper Mississippian limestone and Pennsylvanian coal-bearing strata steeply dipping North to Northeast.

GEOTECHNICAL BEHAVIOR

The Quaternary deposits identified in the map area exhibit a wide range of grain size and geotechnical behaviors. Grain size distribution is one of the primary factors affecting the behavior of soils for geotechnical, hydrogeologic, a nd agricultural applications. The grain size distribution of unconsolidated sediments is dominantly controlled by the conditions under which the material was deposited. Low energy environments allow the deposition of fine -grained materials. High energy deposits limit deposition to only coarser grained materials. Eolian processes produce very well sorted (poorly graded) materials. Fluvial processes produce moderate sorting; colluvial processes produce poorly sorted deposits.

HAZARDS

Flooding is a nearly annual occurrence along the Ohio River. Floods in the late winter or early spring commonly inundate low-lying areas in the floodplain. Larger floods occur roughly every 10 to 20 years (eg. 1913, 1945, 1964, 1997, 2007), and cover parts of the low terraces. The maximum flood of record in the valley was in 1937, flooding river towns throughout the valley. Only structures on the highest outwash terraces and the lacustrine terrace (Qlt) were spared flood damage. The impact of flooding is reflected in land-use patterns through the area. Older homes and businesses have survived on the lacustrine and high outwash terraces, and on the highest parts of low terraces (Qot1, Qot1o, Qot1g). Trailers and less expensively built homes are constructed on the low terraces. Only barns are found on the high parts of the floodplain (Qafp). The floodplain and low parts of the low terraces are dominantly left to woodlands or used for row-crop agriculture. Most livestock husbandry in the alluvial valleys has been abandoned and is now restricted to upland areas above the 10- to 20-year flood zone. The low-relief lacustrine terrace is locally very poorly drained.

The silt soils that dominate the loess-mantled uplands are highly erodible. Soil piping and associated cover collapses are common hazards as ground water seeps through the silt and is commonly perched above fragipans. Great care must be taken during agricultural operations not to mobilize and lose this valuable resource.

The map area is proximal to the Wabash Valley Seismic Zone, the New Madrid Seismic Zone, and is within the Rough Creek – Shawneetown Fault Zone. Small to moderate earthquakes have been felt in the area relatively frequently. The significant thicknesses of unconsolidated sediment (locally as much as 140 feet in the regional map area) raise concerns about ground motion amplification of seismic waves and potential liquefaction. The variations in lithology and thickness between materials in different map units will likely cause different responses of these materials to seismic shaking.

DISCLAIMER

Although these data have been processed successfully on a computer system at the Kentucky Geological Survey (KGS), no warranty, expressed or implied, is made by KGS regarding the utility of the data on any other system, nor shall the act of distribution constitute any such warranty.

KGS does not guarantee this map or digital data to be free of errors or inaccuracies. Some cultural features originate from data sources other than KGS, and may not align with geologic features on this map. KGS disclaims any responsibility or liability for interpretations from this map or digital data, or decisions based thereon.

The views and conclusions contained in this document are those of the authors and should not be interpreted as necessarily representing the official policies, either expressed or implied, of the U.S. Government.

ACKNOWLEDGMENTS

This map was generated using new field mapping and compilation of unpublished and previously published data and was funded in part by the U.S. Geological Survey National Cooperative Mapping Program under the STATEMAP Program authorized by the National Geologic Mapping Act of 1992, Grant No. 08HQPA0003, and by the Kentucky Geological Survey.

Field mapping was completed by Scott Waninger from October 2008 to June 2009, with assistance from R. Counts (KGS).

Subsurface information was compiled from data on file at the Kentucky Geological Survey as well as data contributed by the Kentucky Transportation Cabinet and the U.S. Geological Survey.

REFERENCES

Crawford, M.M., 2004, Spacial database of the Grove Center quadrangle, Kentucky-Illinois, and part of the Shawneetown quadrangle, Kentucky: Kentucky Geological Survey, ser. 12, Digitally Vectorized Geologic Quadrangle Data DVGQ-1314. Adapted from Palmer, J.E., 1976, Geologic map of the Grove Center quadrangle, Kentucky-Illinois, and part of the Shawneetown quadrangle, Kentucky: U.S. Geological Survey Geologic Quadrangle Map GQ-1314, scale 1:24,000.

Faust, R.J., Banfield, G.R., and Willinger, G.A., 1980, A Compliation of Ground Water Quality Data for Kentucky; U.S. Geological Survey, Open File Report 80-685, p. 963

Frye, J.C., Leonard, A.B., Willman, H.B., and Glass, H.D., 1972, Geology and Paleontology of Late Pleistocene Lake Saline, Southeastern Illinois; Illinois State Geological Survey, Circular 471, 44p

Glenn, L.C., 1912, Coals of the Tradewater River Region; Kentucky Geological Survey, Bulletin #17, Serial #24, 75p

Glenn, L.C., 1922, The Geology and Coals of Webster County; Kentucky Geological Survey, Series #6, Vol #5, 249p

Heinrich, P.V., 1982, Geomorphology and Sedimentology of Pleistocene Lake Saline, Southern Illinois; M.S. Thesis University of Illinois: Urbana-Champaign, 145p

Jacobs, E.H., 1981, Soil survey of Union and Webster Counties, Kentucky; U.S. Department of Agriculture, p.126

Jillson, W.R., 1943, The Geology of Union County, Kentucky; The Standard Printing Company, 83p

McFarlan, A.C., 1961, Geology of Kentucky; University of Kentucky; Kentucky Geological Survey, 531p

Mull, D.S., Cushman, R.V., and Lambert, T.W., 1971, Public and Industrial Water Supplies of Kentucky, 1968-69; Kentucky Geological Survey Series 10, IC 20 p.107

Nelson, W.J. and Lumm, D.K., 1986, Geologic Map of the Shawneetown Quadrangle, Gallatin County Illinois; Illinois Geological Survey, Map IGQ-1

Palmer, J.E., 1976, Geologic map of the Grove Center quadrangle, Kentucky-Illinois, and part of the Shawneetown quadrangle, Kentucky: U.S. Geological Survey Geologic Quadrangle Map GQ-1314, scale 1:24,000.

Ray, L.L., 1965, Geomorphology and Quaternary geology of the Owensboro quadrangle, Indiana and Kentucky: U.S. Geological Survey Professional Paper 488, 71p.

Theis, C.V., 1929, The Geology of Henderson County, Kentucky, University of Cincinnati, 251p

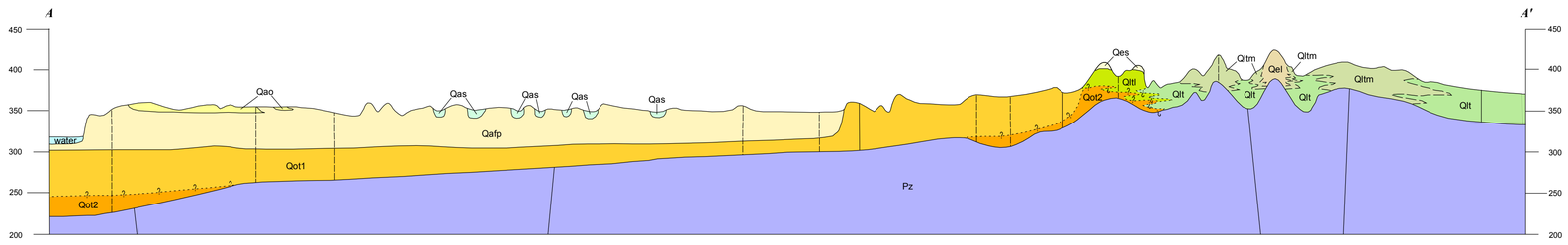

QUATERNARY GEOLOGIC MAP OF THE GROVE CENTER 7.5–MINUTE QUADRANGLE, WESTERN KENTUCKY

By Scott Waninger & Ron Counts

2009