AMD ZEN Frontend

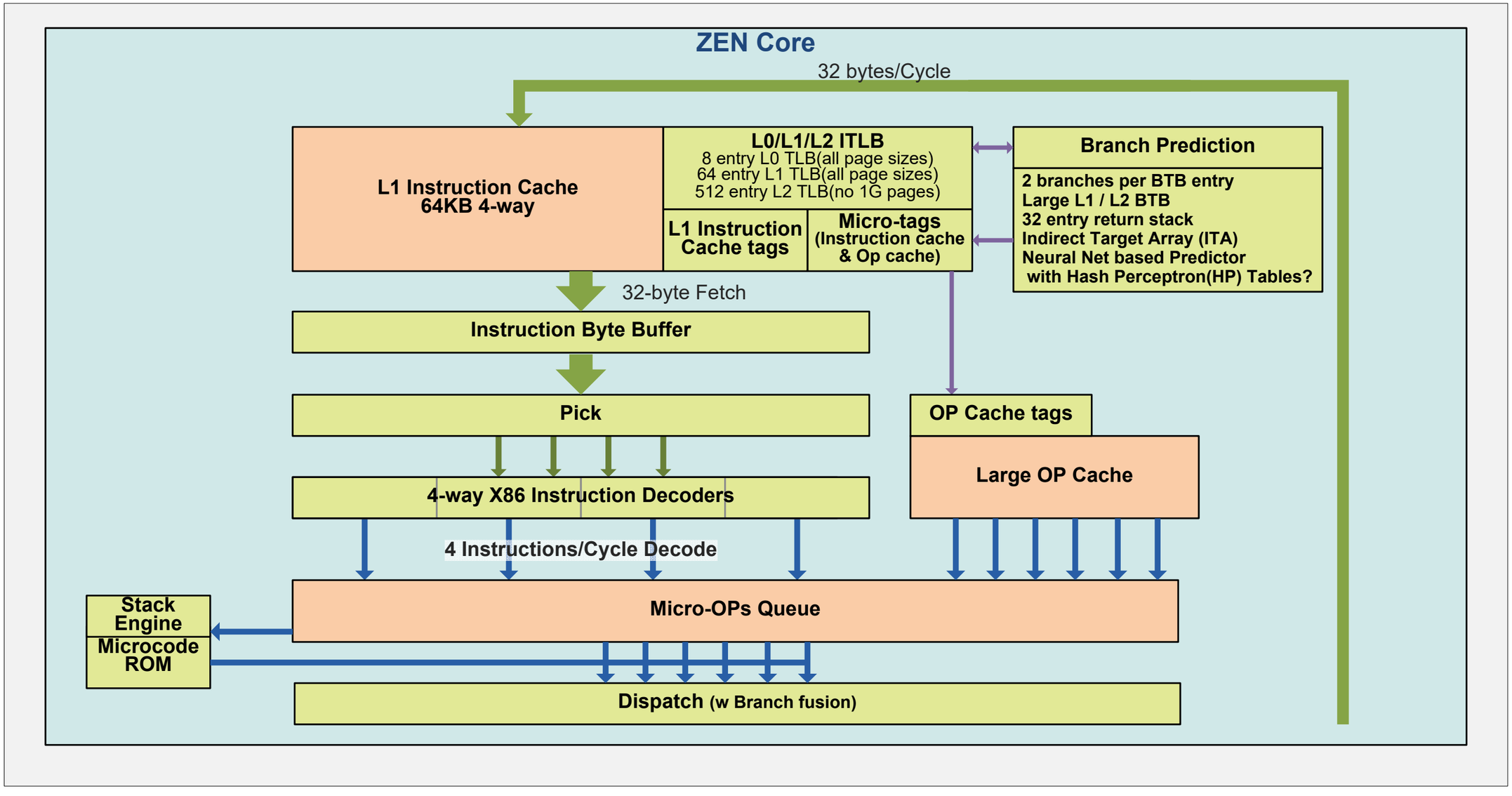

Copyright (c) 2016 Hiroshige Goto All rights reserved.